BATTERY

CONTENTS

page

GENERAL INFORMATION
INTRODUCTION 1
SAFETY PRECAUTIONS AND WARNINGS 1
DESCRIPTION AND OPERATION
BATTERY BLANKET HEATER 1
BATTERY IGNITION OFF DRAW (IOD) 2
CHARGING TIME REQUIRED 2
DIAGNOSIS AND TESTING
BATTERY BLANKET HEATER INSPECTION 2
BATTERY DISCHARGING 3
BATTERY IGNITION OFF DRAW TESTS 4
BATTERY LOAD TEST 5
BATTERY OPEN CIRCUIT VOLTAGE TEST 7
SERVICE PROCEDURES
BATTERY CHARGING 7
CHARGING COMPLETELY DISCHARGED BATTERY 8
VISUAL INSPECTION AND SERVICE 8
REMOVAL AND INSTALLATION
BATTERY TRAY 9
BATTERY 8
SPECIFICATIONS
BATTERY SPECIFICATIONS 10
TORQUE 10

GENERAL INFORMATION

INTRODUCTION

The battery stores, stabilizes, and delivers electrical current to operate various electrical systems in the vehicle. The determination of whether a battery is good or bad is made by its ability to accept a charge. It also must supply high-amperage current for a long enough period to be able to start the vehicle. The capability of the battery to store electrical current comes from a chemical reaction. This reaction takes place between the sulfuric acid solution (electrolyte) and the lead +/- plates in each cell of the battery. As the battery discharges, the plates react with the acid from the electrolyte. When the charging system charges the battery, the water is converted to sulfuric acid in the battery. The concentration of acid in the electrolyte is measured as specific gravity using a hydrometer. The specific gravity indicates the battery's state-of-charge. The OE battery is sealed and water cannot be added.

The battery is vented to release gases that are created when the battery is being charged and discharged. The battery top, posts, and terminals should be cleaned when other under hood maintenance is performed.

When the electrolyte level is below the top of the plates, the battery must be replaced. The battery must be completely charged, and the battery side, posts, and cable terminals must be cleaned before diagnostic procedures are performed.

SAFETY PRECAUTIONS AND WARNINGS

WARNING:

DO NOT ALLOW JUMPER CABLE CLAMPS TO TOUCH EACH OTHER WHEN CONNECTED TO A BOOSTER SOURCE.

DO NOT USE OPEN FLAME NEAR BATTERY.

REMOVE METALLIC JEWELRY WORN ON HANDS OR WRISTS TO AVOID INJURY BY ACCIDENTAL ARCING OF BATTERY CURRENT.

WHEN USING A HIGH OUTPUT BOOSTING DEVICE, DO NOT ALLOW THE DISABLED VEHICLE'S BATTERY TO EXCEED 16 VOLTS. PERSONAL INJURY OR DAMAGE TO ELECTRICAL SYSTEM CAN RESULT.

TO PROTECT THE HANDS FROM BATTERY ACID, A SUITABLE PAIR OF HEAVY DUTY RUBBER GLOVES, NOT THE HOUSEHOLD TYPE, SHOULD BE WORN WHEN REMOVING OR SERVICING A BATTERY. SAFETY GLASSES ALSO SHOULD BE WORN.

DESCRIPTION AND OPERATION

BATTERY BLANKET HEATER

The blanket heater is used with Alaska and Canada cold weather packages. The 110 volt A.C. blanket heater is used to improve the battery cold start ability. This vehicle has an electronic voltage regulator which controls battery charging. ONLY CHRYSLER approved battery blanket/block heater combination should be used. It is designed to provide optimum charging system performance in very cold ambient temperatures below -17.8°C (0°F). The addition of an aftermarket battery heater or engine block heater

DESCRIPTION AND OPERATION (Continued)

will adversely affect battery charging and will result in battery discharge or damage.

BATTERY IGNITION OFF DRAW (IOD)

A completely normal vehicle will have a small amount of current drain on the battery with the key out of the ignition. It can range from 15 to 30 milliamperes after all the modules time out. If a vehicle will not be operated for approximately a 20 days, the IOD fuse should be disconnected to eliminate the vehicle electrical drain on the battery. The IOD fuse is located in the Junction Block number 5. Removing this fuse will help prevent the battery from discharging during storage.

CHARGING TIME REQUIRED

WARNING: NEVER EXCEED 20 AMPS WHEN CHARGING A COLD -1°C (30°F) BATTERY. PERSONAL INJURY MAY RESULT.

The time required to charge a battery will vary depending upon the following factors.

SIZE OF BATTERY

A completely discharged large heavy-duty battery may require more recharging time than a completely discharged small capacity battery, refer to (Fig. 1) for charging times.

CHARGING AMPERAGE	5 AMPS	10 AMPS	15 AMPS	20 AMPS
OPEN CIRCUIT VOLTAGE	HOUR CHARGING AT 21°C (77°F)			
12.34 TO 12.52	4.6 HRS.	2.3 HRS.	1.5 HRS.	1.1 HRS.
12.16 TO 12.33	6.9 HRS.	3.4 HRS.	2.3 HRS.	1.8 HRS.
11.97 TO 12.15	9.2 HRS.	4.6 HRS.	3.0 HRS.	2.3 HRS.
10.00 TO 11.96	11.5 HRS.	5.8 HRS.	3.8 HRS.	2.9 HRS.
10.00 TO 0	SEE CHARGING COMPLETELY DISCHARGE BATTERY			

Fig. 1 Battery Charging Time

TEMPERATURE

A longer time will be needed to charge a battery at -18°C (0°F) than at 27°C (80°F). When a fast charger is connected to a cold battery, current accepted by battery will be very low at first. In time, the battery will accept a higher rate as battery temperature warms.

CHARGER CAPACITY

A charger which can supply only five amperes will require a much longer period of charging than a charger that can supply 20 amperes or more.

STATE OF CHARGE

A completely discharged battery requires more charging time than a partially charged battery. Electrolyte is nearly pure water in a completely discharged battery. At first, the charging current amperage will be low. As water is converted back to sulfuric acid inside the battery, the current amp rate will rise. Also, the specific gravity of the electrolyte will rise. Refer to Battery Charging procedures.

DIAGNOSIS AND TESTING

BATTERY BLANKET HEATER INSPECTION

(1) Remove battery. Refer to battery removal.
(2) Remove blanket heater from battery (Fig. 2).

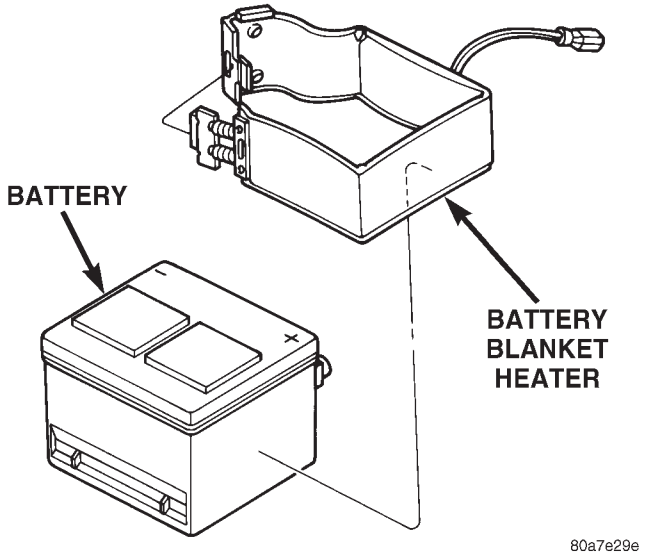

Fig. 2 Battery Blanket Heater

WARNING: SERIOUS PERSONAL INJURY AND/OR ELECTRICAL BURNS COULD RESULT IF THESE PROCEDURES ARE NOT FOLLOWED.

(3) Clean battery blanket heater vinyl cover with a baking soda solution and wipe dry.
(4) Inspect blanket heater for cuts, abrasion or other damage. If heater is damaged replace. If OK, go to Step 5.
(5) Lay heater flat and connect heater to vehicle's connector.
(6) Connect the power cord to a 110 volt AC source for 3 minutes MAXIMUM.
(7) Disconnect voltage source from the power cord.

DIAGNOSIS AND TESTING (Continued)

(8) Immediately feel the heater cover on the inside it should be warm to the touch. If warm, heater is OK. If not OK, go to Step 9.

(9) Using an Ohmmeter, connect a lead across the two terminals.

(10) Check for a resistance value of 220 to 280 Ohms. If within the resistance value range the blanket is OK. If not OK, replace blanket.

(11) Check extension cord to vehicle for voltage. If extension cord is OK, go to Step 12. If not OK, repair as necessary.

(12) Ensure heater receives voltage from extension cord and power cord. If OK, replace heater. If not OK, repair as necessary.

BATTERY DISCHARGING

CAUSES OF BATTERY DISCHARGING

It is normal to have up to a 30 milliamperes continuous electrical draw ON the battery. This draw will take place with the ignition in the OFF position, and the courtesy, dome, storage compartments, and engine compartment lights OFF. The continuous draw is due to various electronic features or accessories that require electrical current with the ignition OFF to function properly. When a vehicle is not used over an extended period of approximately 20 days the IOD fuse should be disconnected. The IOD fuse is located in the Power Distribution Center and disconnection of this fuse will help prevent the battery from discharge during storage. Refer to Battery Diagnosis and Testing Chart and to the proper procedures.

BATTERY DIAGNOSIS AND TESTING		
STEPS	**POSSIBLE CAUSE**	**CORRECTION**
VISUAL INSPECTION Check for possible damage to battery and clean battery.	(1) Loose battery post, Cracked battery cover or case, Leaks or Any other physical (2) Battery OK.	(1) Replace Battery (2) Check state of charge. Perform Battery Open Circuit Voltage Test.
BATTERY OPEN CIRCUIT VOLTAGE TEST	(1) Battery is above 12.40 Volts (2) Battery is below 12.40 Volts.	(1) Perform the Battery Load Test. (2) Perform Battery Charging procedure
BATTERY CHARGED	(1) Battery accepted Charge. (2) Battery will not accept charge	(1) Perform Battery Open Circuit Voltage Test. (2) Perform Charging a Completely Discharged Battery procedure.
BATTERY LOAD TEST	(1) Acceptable minimum voltage. (2) Unacceptable minimum voltage	(1) Battery is OK to put in use, perform Battery Ignition Off Draw Test. (2) Replace Battery and perform Battery Ignition Off Draw Test.
CHARGING A COMPLETELY DISCHARGED BATTERY	(1) Battery accepted charge. (2) Battery will not accept charge.	(1)Perform Battery Open Circuit Voltage Test. (2) Replace Battery.
IGNITION OFF DRAW TEST	(1) IOD is 15-30 Milliamperes. (2) IOD Exceeds 30 Milliamperes.	(1) Vehicle is normal. (2) Eliminate excess IOD draw.

DIAGNOSIS AND TESTING (Continued)

ABNORMAL BATTERY DISCHARGING

- Corroded battery posts, cables or terminals.
- Loose or worn generator drive belt.
- Electrical loads that exceed the output of the charging system due to equipment or accessories installed after delivery.
- Slow driving speeds in heavy traffic conditions or prolonged idling with high-amperage electrical systems in use.
- Defective electrical circuit or component causing excess Ignition Off Draw (IOD). Refer to Ignition Off Draw (IOD).
- Defective charging system.
- Defective battery.

BATTERY IGNITION OFF DRAW TESTS

High battery current draw with the ignition switch in the OFF position will discharge a battery. After a dead battery is serviced the vehicle Ignition Off Draw (IOD) should be checked. To determine if a high current draw condition exists then check the vehicle with a multi-meter on the Milliampere Scale.

(1) Verify all electrical accessories are OFF:

- Remove key from ignition switch
- Turn off all lamps
- Trunk compartment, ensure that the trunk compartment lamp is off when the trunk lid is closed
- Engine compartment, ensure that the hood lamp is off when hood is closed
- Glove box, ensure that the glove box compartment lamp is off when the door is closed
- All doors are closed
- Sun visor vanity lamps are OFF
- Allow the Illuminated Entry System to time out in approximately 30 seconds, if equipped.

(2) Disconnect battery negative remote cable (Fig. 3).

CAUTION: Always disconnect the milliampere meter before opening a door.

(3) Using an multi-meter, that has least a milliampere range of 200 mA. Set meter to the highest mA range.

(a) Connect it between the battery negative remote terminal and the battery negative remote stud (Fig. 4).

(b) If the reading is less than 30 milliamperes, system is OK.

(c) If the reading is more than 30 milliamperes, go to High Milliampere Reading.

(4) Each time the milliampere meter is disconnected and connected, all electronic timer functions will be activated for approximately one minute.

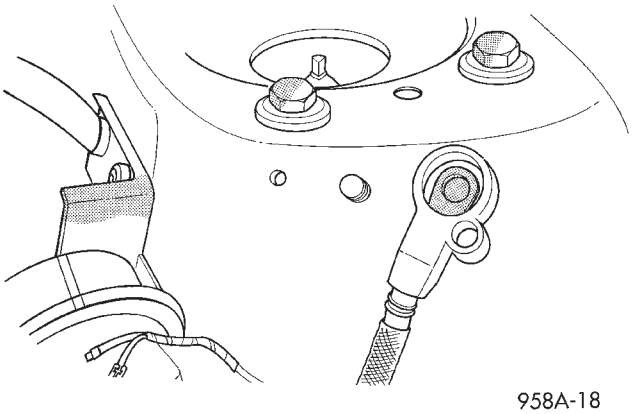

Fig. 3 Disconnect Battery Cable at ShockTower

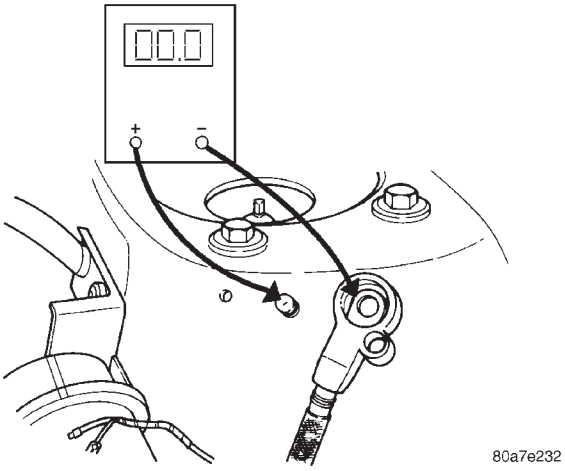

Fig. 4 Ignition Off Draw Test

HIGH MILLIAMPERE READING

There is either a short circuit or a fault in an electronic module. There are seven fuses in the Power Distribution Center and Junction Block that feed the modules with ignition off draw.

Ensure that all electronic timer functions are timed out, before testing any of the components.

IN THE POWER DISTRIBUTION CENTER

- Automatic Transmission Control Module (20 Amp)
- Power Control Module (20 Amp)
- Hazard Flasher (20 Amp)

IN THE JUNCTION BLOCK:

- Canadian Daytime Running Lamps (DRL) (20 Amp)
- Optional Audio Power Amplifier (20 Amp)
- Interior lamps (10 Amp)
- Instrument Cluster (20 Amp)

DIAGNOSIS AND TESTING (Continued)

CAUTION: Always disconnect the milliampere meter before opening a door.

(1) Remove all seven fuses. By removing these fuses all ignition off draw from the vehicle electronics will be disconnected. There should be no reading on the milliampere meter. If no reading go to Step 2. If a reading there is a short circuit. Refer to Group 8W, Wiring Diagrams.

(2) Install the Daytime Running Lamp (DRL) fuse, if equipped. If meter has no reading go to Step 4. If there is a reading go to Step 3.

(3) Disconnect the DRL module.

(a) If meter has no reading, replace the DRL module.

(b) If meter has a reading, there is a short circuit in the L25 circuit. Refer to Group 8W, Wiring Diagrams.

(4) Install the Power Amplifier fuse. If meter has no reading go to Step 6. If there is a reading go to Step 5.

(5) Disconnect the Power Amplifier.

(a) If meter has no reading, replace the Power Amplifier.

(b) If meter has a reading, there is a short circuit in the F30 circuit. Refer to Group 8W, Wiring Diagrams.

(6) Install the Interior Lamp fuse. If meter has no reading go to Step 7. If there is a reading go to Step 1.

(a) Disconnect the Radio.

(I) If meter has no reading, replace the Radio.

(II) If meter has a reading, go to Step 2.

(b) Disconnect the Power Sun Roof Module by disconnecting the headliner connector. The connector is located on the back of Junction Block below the fuses.

(I) If meter has no reading, replace the Sun Roof Module.

(II) If meter has a reading, go to Step 3.

(c) Disconnect Body Control Module.

(I) If meter has no reading, replace the Body Control Module.

(II) If test lamp does not go out, there is a short circuit in the M1 circuit. Refer to Group 8W, Wiring Diagrams.

(7) Install the Automatic Transmission Control Module fuse. If meter has no reading go to Step 9. If there is a reading go to Step 8.

(8) Disconnect the Automatic Transmission Control Module.

(a) If meter has no reading, replace the Automatic Transmission Control Module.

(b) If meter has a reading, there is a short circuit in the A14 circuit. Refer to Group 8W, Wiring Diagrams.

(9) Install the Powertrain Control Module fuse. If meter has no reading go to Step 11. If there is a reading go to Step 10.

(10) Disconnect the Powertrain Control Module.

(a) If meter has no reading, replace the Powertrain Control Module

(b) If meter has a reading, there is a short circuit in the A14 circuit. Refer to Group 8W, Wiring Diagrams.

(11) Install the Instrument Cluster fuse. If meter has no reading go to Step 13. If there is a reading go to Step 12.

(12) Disconnect the Instrument Cluster.

(a) If meter has no reading, replace the Instrument Cluster.

(b) If meter has a reading, there is a short circuit in the F33 circuit. Refer to Group 8W, Wiring Diagrams.

(13) Install the Hazard Flasher fuse. If meter has no reading there is no Ignition Off Draw. If there is a reading go to Step 14.

(14) Disconnect the Hazard Flasher.

(a) If meter has no reading, replace the Hazard Flasher.

(b) If meter has a reading, there is a short circuit in the A15 circuit. Refer to Group 8W, Wiring Diagrams.

BATTERY LOAD TEST

A fully charged battery must have cranking capacity. To provide the starter motor and ignition system enough power to start the engine over a broad range of ambient temperatures. A battery load test will verify the actual cranking capability of the battery.

WARNING: IF BATTERY SHOWS SIGNS OF FREEZING, LEAKING, LOOSE POSTS, OR EXCESSIVELY LOW ELECTROLYTE LEVEL, DO NOT TEST. ACID BURNS OR AN EXPLOSIVE CONDITION MAY RESULT.

(1) Disconnect and isolate the battery negative remote cable first. Then disconnect and isolate the positive Jump Start cable.

DIAGNOSIS AND TESTING (Continued)

(2) Use a suitable Volt/Ammeter/Load tester connected between remote battery terminals (Fig. 5) and (Fig. 6). Check the open circuit voltage of the battery. Voltage should be equal to or greater than 12.4 volts. If below 12.4 volts charge battery, perform the same test at the battery. Remove both battery cables the negative cable first. If the voltage is still below 12.4 perform Battery Charging procedures.

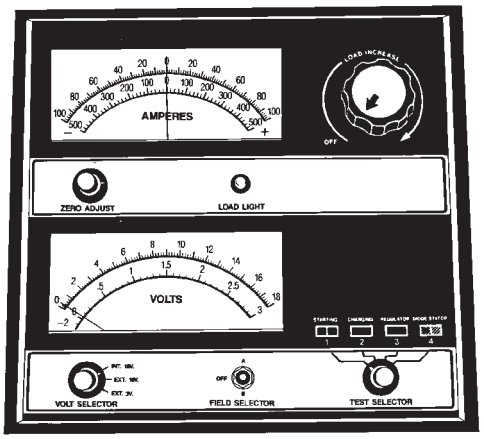

Fig. 5 Volt-Ammeter-Load Tester

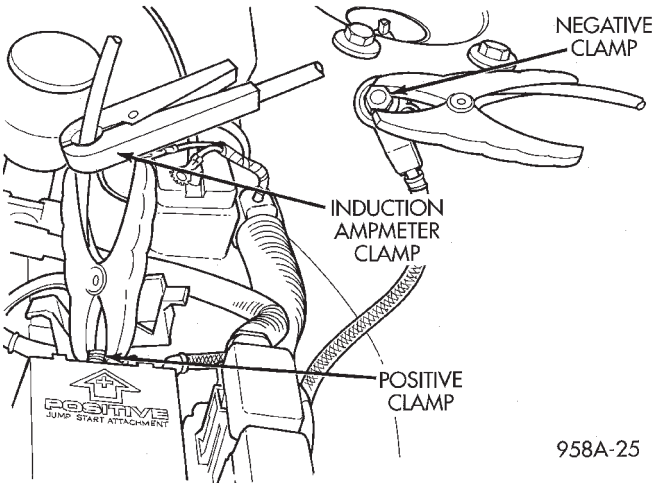

Fig. 6 Volt-Ammeter-Load Tester Connections

(3) Rotate the load control knob of the carbon pile rheostat to apply a 260 amp load. Apply this load for 15 seconds to remove the surface charge from the battery, and return the control knob to off (Fig. 7).

(4) Allow the battery to stabilize for two minutes, and then verify open circuit voltage.

(5) Rotate the load control knob on the tester to maintain 50% (260) of the battery cold crank rating for a minimum 15 seconds (Fig. 8).

(6) After 15 seconds, record the loaded voltage reading and return the load control to off.

(7) Voltage drop will vary according to battery temperature at the time of the load test. Battery temperature can be estimated by the temperature of exposure over the preceding several hours. If the battery has been charged, boosted, or loaded a few minutes prior to the test, the battery would be slightly warmer. Refer to Battery Load Test Temperatures Chart for proper loaded voltage reading.

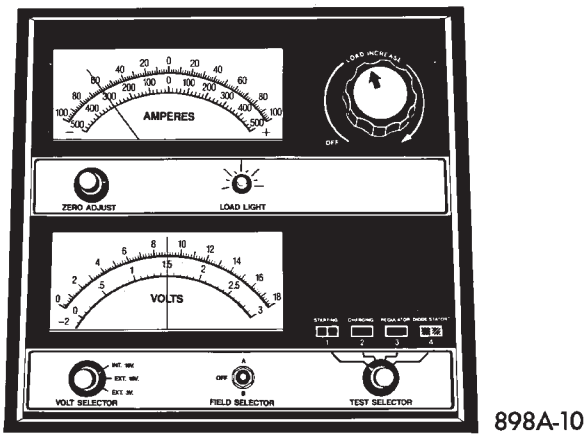

Fig. 7 Remove Surface Charge from Battery

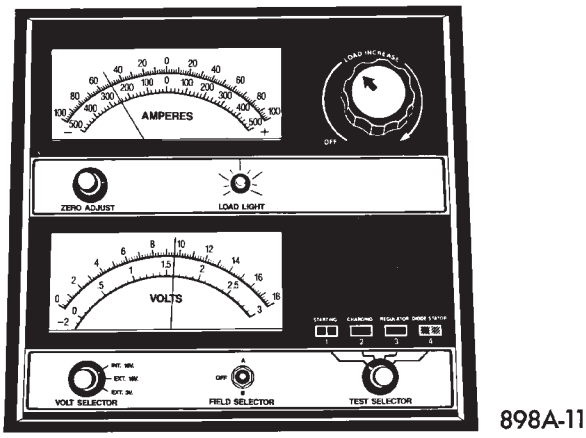

Fig. 8 Load 50% Cold Crank Rating

Battery Load Test Temperatures		
Minimum Voltage	Temperature	
	°F	°C
9.6 volts	70° and above	21° and above
9.5 volts	60°	16°
9.4 volts	50°	10°
9.3 volts	40°	4°
9.1 volts	30°	-1°
8.9 volts	20°	-7°
8.7 volts	10°	-12°
8.5 volts	0°	-18°

DIAGNOSIS AND TESTING (Continued)

(8) If battery passes load test, it is in good condition and further tests are not necessary. If it fails load test, it should be replaced.

BATTERY OPEN CIRCUIT VOLTAGE TEST

An open circuit voltage no load test shows the state of charge of a battery and whether it is ready for a load test at 50 percent of the battery's cold crank rating. Refer to Battery Load Test. If a battery has open circuit voltage reading of 12.4 volts or greater, and will not pass the load test, replace the battery because it is defective. To test open circuit voltage, perform the following operation.

(1) Remove both battery cables, negative cable first. Connect a Volt/Ammeter/Load tester (Fig. 9) to the battery posts (Fig. 10).

(2) Allow the battery to stabilize for 2 minutes, and then verify the open circuit voltage (Fig. 11).

(3) This voltage reading will approximate the state of charge of the battery. It will not reveal battery cranking capacity.

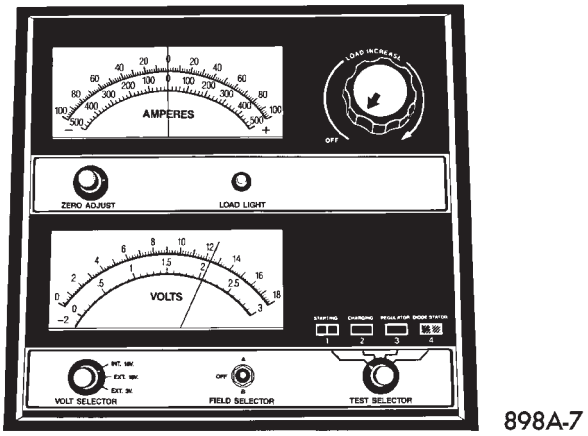

Fig. 9 Testing Open Circuit Voltage

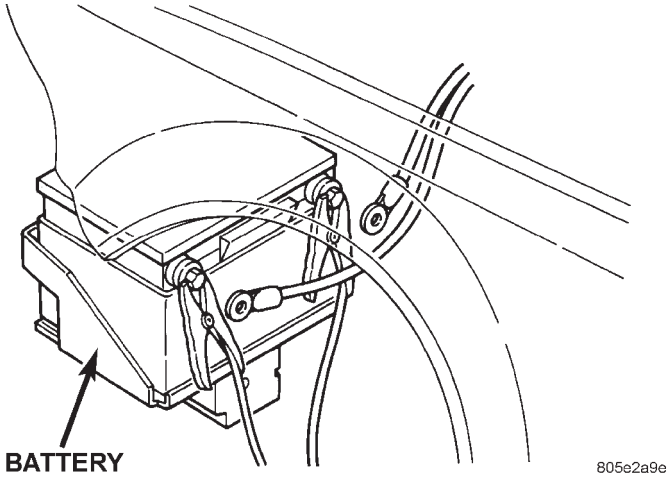

Fig. 10 Volt-Ammeter Load Tester Connections

Open Circuit Volts	Percent Charge
11.7 volts or less	0%
12.0	25%
12.2	50%
12.4	75%
12.6 or more	100%

Fig. 11 Battery Open Circuit Voltage

SERVICE PROCEDURES

BATTERY CHARGING

A battery is considered fully charged when it will meet all the following requirements.

- It has an open circuit voltage charge of at least 12.4 volts (Fig. 11).
- It passes the 15 second load test, refer to Battery Load Test Temperatures Chart above.

WARNING: DO NOT ASSIST BOOST OR CHARGE A FROZEN BATTERY.

EXPLOSIVE GASES FORM OVER THE BATTERY, DO NOT SMOKE, USE FLAME, OR CREATE SPARKS NEAR BATTERY.

CAUTION: Disconnect the battery NEGATIVE cable first (Fig. 3) before charging battery to avoid damage to electrical systems. Do not exceed 16.0 volts while charging battery. Refer to the instructions supplied with charging equipment

Battery electrolyte will bubble inside of battery case while being charged properly. If the electrolyte boils violently, or is discharged from the vent holes while charging, immediately reduce charging rate or turn off charger. Evaluate battery condition. Battery damage may occur if charging is excessive.

Some battery chargers are equipped with polarity sensing devices to protect the charger or battery from being damaged if improperly connected. If the battery state of charge is too low for the polarity sensor to detect, the sensor must be bypassed for charger to operate. Refer to operating instructions provided with battery charger being used.

CAUTION: Do not overcharge Battery refer to Charging Rate Chart.

After the battery has been charged to 12.4 volts or greater, perform a load test to determine cranking capacity. Refer to Battery Load Test in this Group. If the battery will endure a load test, return the battery to use. If battery will not endure a load test, it must be replaced. Properly clean and inspect battery

SERVICE PROCEDURES (Continued)

hold downs, tray, terminals, cables, posts, and top before completing service.

CHARGING COMPLETELY DISCHARGED BATTERY

The following procedure should be used to recharge a completely discharged battery. Unless procedure is properly followed, a good battery may be needlessly replaced (Fig. 12).

Voltage	Hours
16.0 volts or more	up to 4 hrs.
14.0 to 15.9 volts	up to 8 hrs.
13.9 volts or less	up to 16 hrs.

Fig. 12 Charging Rate

(1) Measure the voltage at remote cable terminals with a voltmeter accurate to 1/10 volt (Fig. 13). If below 10 volts, charge current will be low, and it could take some time before it accepts a current in excess of a few milliamperes. Such low current may not be detectable on amp meters built into many chargers.

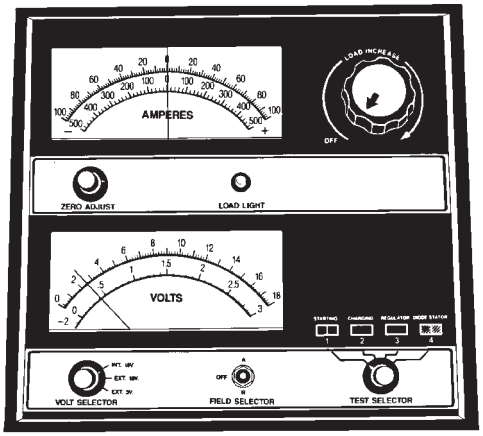

Fig. 13 Voltmeter Accurate to 1/10 Volt (Connected)

(2) Connect charger leads to the remote cables. Some chargers feature polarity protection circuitry that prevents operation unless charger is connected to battery posts correctly. A completely discharged battery may not have enough voltage to activate this circuitry. This may happen even though the leads are connected properly.

(3) Battery chargers vary in the amount of voltage and current they provide. For the time required for the battery to accept measurable charger current at various voltages, refer to (Fig. 12). If charge current is still not measurable after charging times, the battery should be replaced. If charge current is measurable during charging time, the battery may be good, and charging should be completed in the normal manner.

VISUAL INSPECTION AND SERVICE

CAUTION: Do not allow baking soda solution to enter vent holes, as damage to battery can result.

(1) Clean battery with a solution of warm water and baking soda. Apply solution with a bristle brush and allow to soak until acid deposits loosen (Fig. 14). Rinse with clear water and blot dry with paper toweling. Dispose of toweling in a safe manner. Refer to the WARNINGS on top of battery.

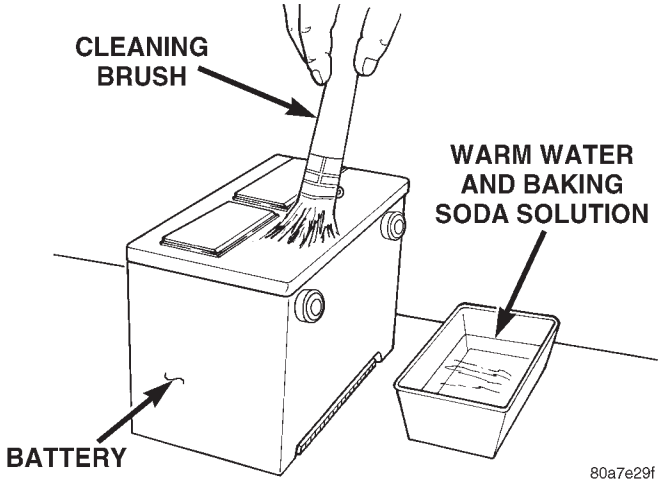

Fig. 14 Cleaning Battery

(2) Inspect battery case and cover for cracks or leakage. If leakage is present battery must be replaced.

(3) Inspect battery tray for damage caused by acid from battery. If acid damage is present, it will be necessary to clean area with:

- Baking soda solution
- Wire brush
- Scraper

(4) Clean battery terminals with baking soda and suitable cleaning tool.

(5) Inspect cables for damage and broken terminals. Replace damaged, frayed cables and broken terminal.

(6) Inspect battery for proper or damaged hold down ledge.

REMOVAL AND INSTALLATION

BATTERY

REMOVAL

Battery is accessible without removing the tire and wheel.

(1) Make sure ignition switch is in OFF UNLOCKED position and all accessories are OFF.

REMOVAL AND INSTALLATION (Continued)

WARNING: NEVER GET UNDER A LIFTED VEHICLE IF NOT SUPPORTED PROPERLY ON SAFETY STANDS.

(2) Disconnect battery negative cable from remote negative terminal on shock tower (Fig. 3).
(3) Turn steering wheel to the full left position.
(4) Twist the four plastic screws one quarter turn to release shield.
(5) Remove shield.
(6) Disconnect battery blanket heater cord, if equipped (Fig. 15).

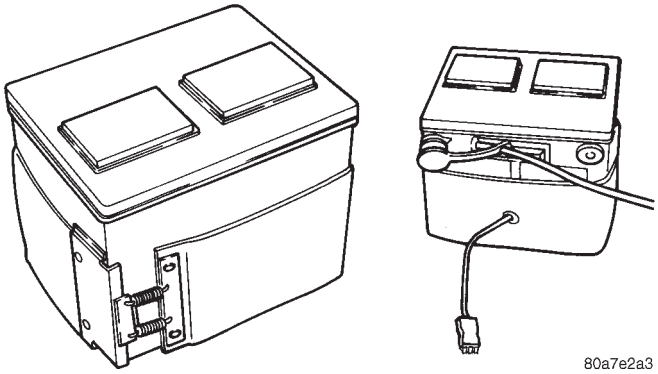

Fig. 15 Battery with Blanket Heater

(7) Remove battery negative cable followed by the battery positive cable.
(8) Remove bolt attaching the battery strap to the battery hold down bracket. Remove hold down bracket bolt.
(9) Slide battery to rear of tray and lift over lip. Use care not to tip battery so that the acid will not spill out.
(10) Remove battery.
(11) Remove battery blanket heater if equipped (Fig. 15).

INSTALLATION

For installation, reverse the above procedures. Tighten battery cables to 17 N·m (150 in. lbs.) torque.

BATTERY TRAY

REMOVAL

(1) Remove battery, refer to Battery Removal procedures above.
(2) Remove the battery tray attaching bolts (Fig. 16).
(3) Remove battery tray.
(4) Remove battery strap.

INSTALLATION

For installation, reverse the above procedures.

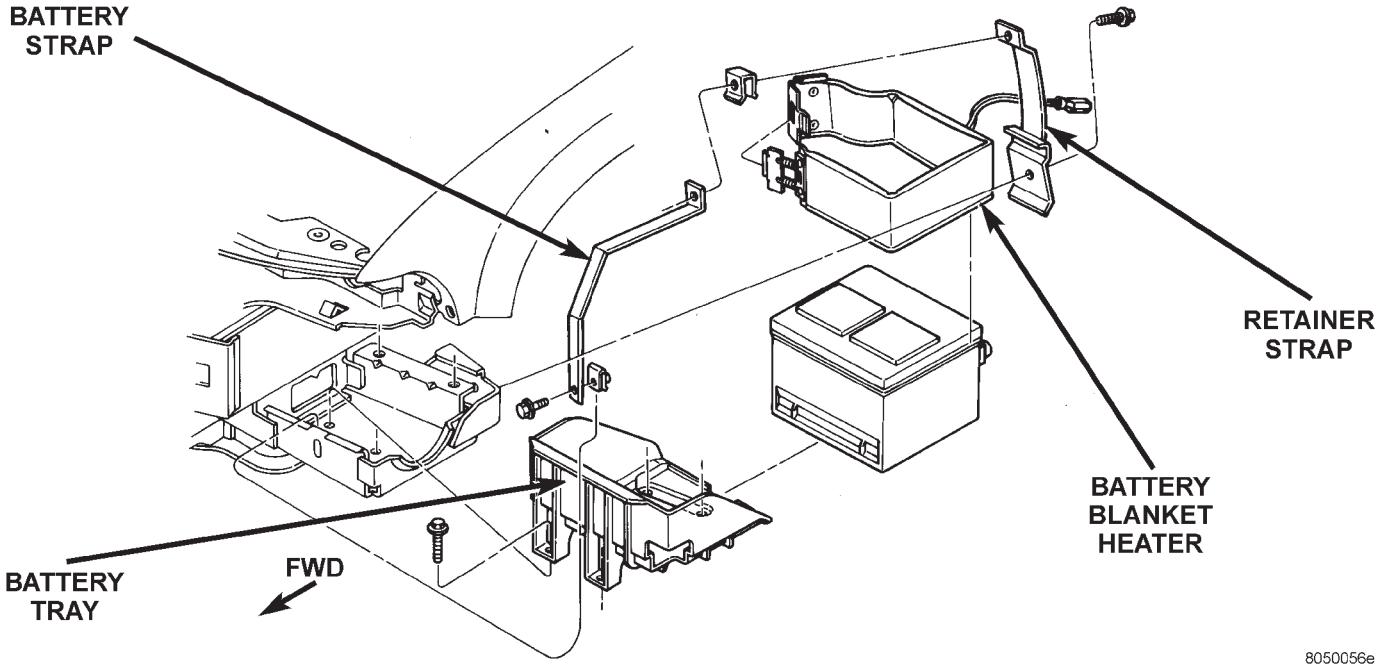

Fig. 16 Battery Tray Removal

SPECIFICATIONS

BATTERY SPECIFICATIONS

Load Test (Amps)	Cold Cranking Rating @ -18°C (0°F)	Reserve Capacity
260 Amp	510 Amp	110 Minutes

COLD CRANK RATING

The current battery can deliver for 30 seconds and maintain a terminal voltage of 7.2 volts or greater at –18° C (0° F).

RESERVE CAPACITY RATING

The length of time a battery can deliver 25 amps and maintain a minimum terminal voltage of 10.5 volts at 27°C (80°F).

TORQUE

DESCRIPTION	TORQUE
Battery Hold Down Bolt Clamp Bolt	14 N·m (160 in. lbs.)